Technical data sheet

Product features

Fry-top griddle plate 32x48 electric smooth without cabinet 230 V / 1N		
Model	**SAP Code**	00001147
FTH 30 EL	**A group of articles - web**	Grills and grill plates



- Top type: Smooth
- Griddle dimensions [mm x mm]: 320 x 480
- Griddle thickness [mm]: 10.00
- Container for liquid fat: Yes
- Maximum device temperature [°C]: 300
- Removable rim: No

SAP Code	00001147	**Power electric [kW]**	3.000
Net Width [mm]	328	**Loading**	230 V / 1N - 50 Hz
Net Depth [mm]	609	**Griddle dimensions [mm x mm]**	320 x 480
Net Height [mm]	290	**Top type**	Smooth
Net Weight [kg]	23.00		

RM GASTRO, s.r.o.,
Třída Čs. armády 816,
391 81 Veselí nad Lužnicí 1, ID:49825062

Technical data sheet

Technical drawing

Fry-top griddle plate 32x48 electric smooth without cabinet 230 V / 1N		
Model	**SAP Code**	00001147
FTH 30 EL	**A group of articles - web**	Grills and grill plates

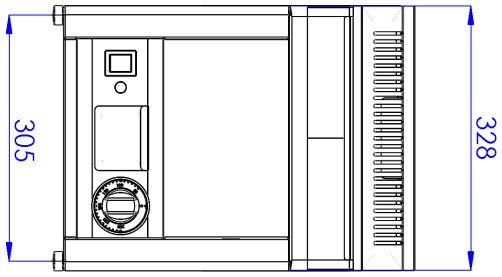

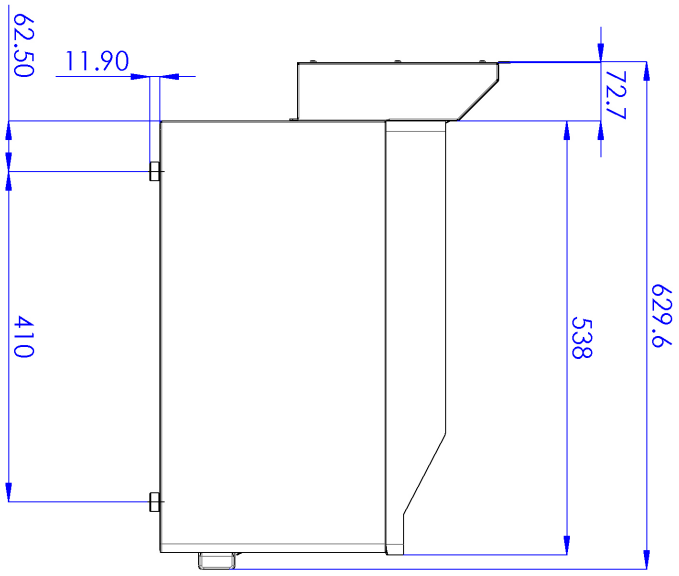

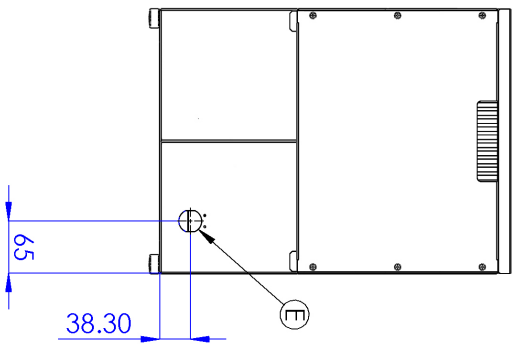

RM GASTRO, s.r.o.,
Třída Čs. armády 816,
391 81 Veselí nad Lužnicí 1, ID:49825062

Technical data sheet

Product benefits

Fry-top griddle plate 32x48 electric smooth without cabinet 230 V / 1N		
Model	**SAP Code**	00001147
FTH 30 EL	**A group of articles - web**	Grills and grill plates

1

All-stainless design

long life
resistance of AISI 304 stainless steel material
the material does not cut

- savings on service interventions
- easy cleaning and maintenance of equipment

2

Degree of protection of the control elements IPX4

maintenance-free system
resistance to splash water
long life

- savings on service interventions
- easy cleaning and maintenance of equipment

3

Outlet for waste liquids

ensures that oil drips into the socket

- easy maintenance
- easy cleaning

4

High non-removable hem

better hygienic conditions
preventing grease from splashing onto ancillary equipment

- easy maintenance
- easy cleaning

5

Smooth steel plate

good heat transfer and the surface does not get scratched
enables preparation on smooth or grooved plates

- time-saving for food preparation
- no reheating and long cooking times

6

Cooking unit for use on a table or on a base

variable use
the possibility of placement in smaller spaces

- easy handling
- cost savings on substructure

RM GASTRO, s.r.o.,
Třída Čs. armády 816,
391 81 Veselí nad Lužnicí 1, ID:49825062

Technical data sheet

Technical parameters

Fry-top griddle plate 32x48 electric smooth without cabinet 230 V / 1N

Model	SAP Code	00001147
FTH 30 EL	A group of articles - web	Grills and grill plates

1. **SAP Code:**
   00001147
2. **Net Width [mm]:**
   328
3. **Net Depth [mm]:**
   609
4. **Net Height [mm]:**
   290
5. **Net Weight [kg]:**
   23.00
6. **Gross Width [mm]:**
   395
7. **Gross depth [mm]:**
   705
8. **Gross Height [mm]:**
   482
9. **Gross Weight [kg]:**
   29.00
10. **Device type:**
    Electric unit
11. **Construction type of device:**
    Table top
12. **Power electric [kW]:**
    3.000
13. **Loading:**
    230 V / 1N - 50 Hz
14. **Protection of controls:**
    IPX4
15. **Material:**
    AISI 430
16. **Indicators:**
    operation and warm-up
17. **Maximum device temperature [°C]:**
    300
18. **Minimum device temperature [°C]:**
    50
19. **Adjustable feet:**
    Yes
20. **Griddle dimensions [mm x mm]:**
    320 x 480
21. **Griddle thickness [mm]:**
    10.00
22. **Container for liquid fat:**
    Yes
23. **Removable rim:**
    No
24. **Uniform heating:**
    Yes
25. **Top type:**
    Smooth
26. **Cross-section of conductors CU [mm²]:**
    0,75

RM GASTRO, s.r.o.,
Třída Čs. armády 816,
391 81 Veselí nad Lužnicí 1, ID:49825062